SIGN	DATE	DESCRIPTION	APPROVER
△1			
△2			

DO NOT SCALE DRAWING

UBLESS OTHERWISE SPECIFIED TOLERANCES FOR MILLIMETERS ARE:	0.5-8mm ± 0.20mm 8-30mm±0.40mm 30-120mm±0.50mm	X.X ±0.1 X.XX ±0.05 X° ±1°

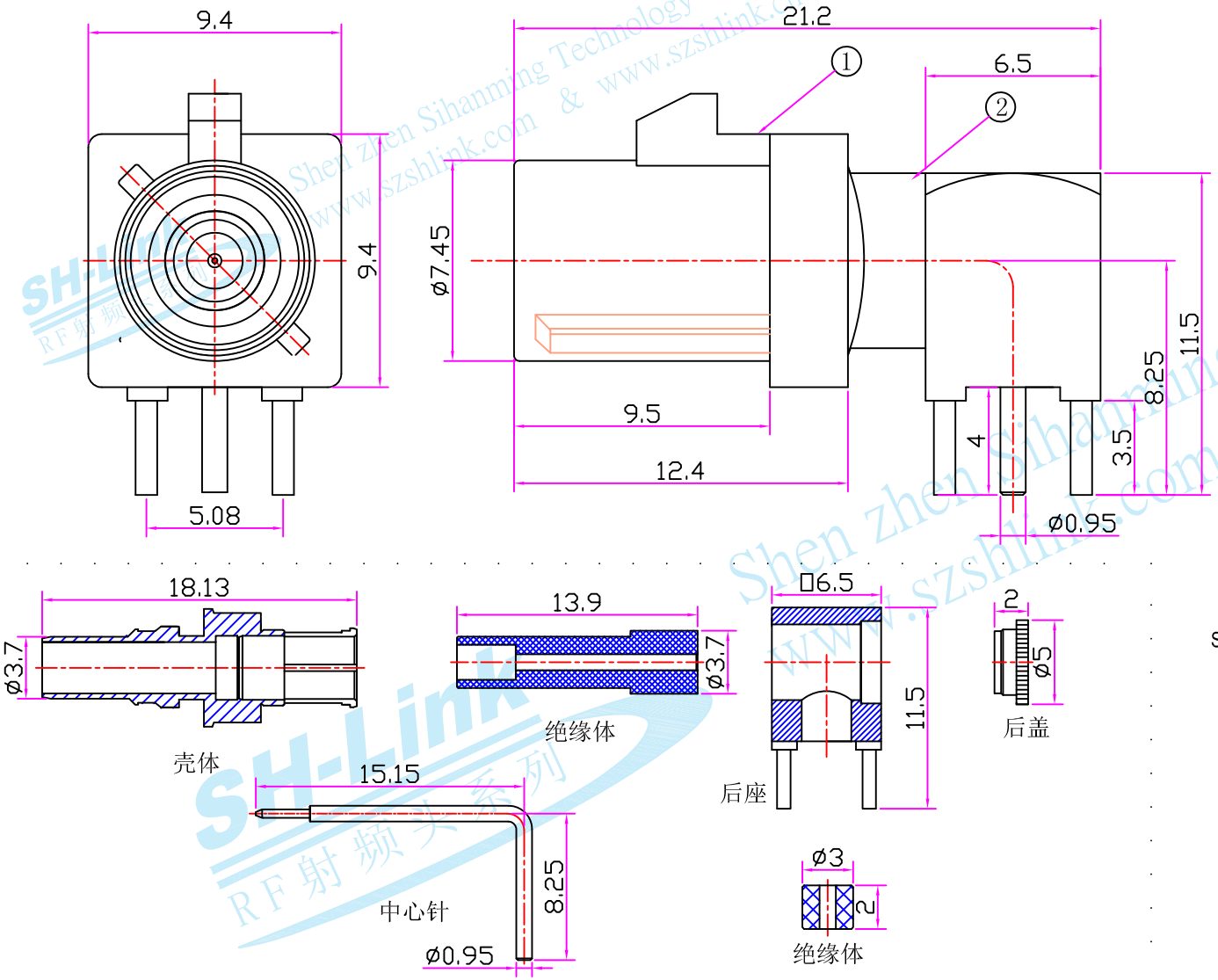

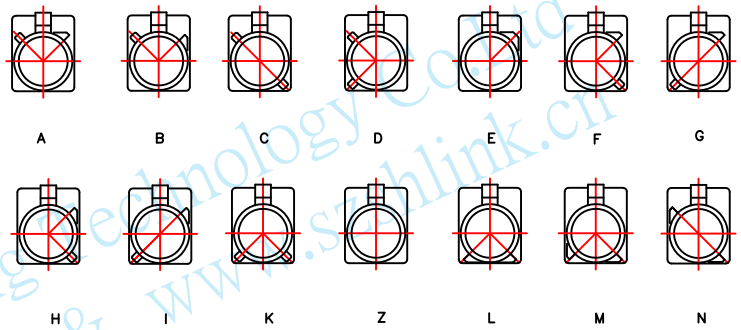

STYLE	KEY CODE	COLOR	STYLE	KEY CODE	COLOR
01	A	JET BLACK (黑色)	08	H	HEATHER VIOLET (粉红色)
02	B	CREAM (白色)	09	I	BEIGE (米黄色)
03	C	SIGNAL BLUE (蓝色)	10	K	CURRY(土黄色)
04	D	CLARET VIOLET (紫红色)	11	Z	WATER BLUE(水蓝色)
05	E	LEAF GREEN (军绿色)	12	L	CARMINE RED (桔红色)
06	F	NUT BROWN (棕褐色)	13	M	PASTEL ORANGE (橙色)
07	G	BLUE GREY (灰色)	14	N	PASTEL GREEN (浅绿色)

NO	DESCRIPTION	PART NUMBER	MATERIAL	QTY
7				
6				
5				
4				
3				
2	CONNECTOR	SHM. 040. 020		1
1	HOUSING	SH-FAKRA00901-914	PA66+30%GF	1

APPROVALS		DATE
DRAW:		
CHECKED:		
DESIDNED:		
REVISION:		

SH-Link RF射频头系列

深圳市思翰铭科技有限公司
Shenzhen Sihanming Technology Co.Ltd

PART NO.	PART DESCRIPTION
SHM. 900. 0006-1	
SCALE	

FAKRA SMB-50JWE-2

Shen zhen Sihanming Technology Co.Ltd www.szshlink.com & www.szshlink.cn
SH-Link RF射频头系列